ROMAI J., v.12, no.2(2016), 173–178

QUANTITATIVE AND QUALITATIVE ANALYSIS OF EVACUATION SYSTEM BY USING GSPNS

Inga Titchiev
Institute of Mathematics and Computer Science, Chişinău, Republic of Moldova
inga.titchiev@gmail.com

Abstract The aim of this research is to provide potential solutions to respond in case of disaster [2] and assist in the decision-making process by using Petri nets model [1, 4]. In order to provide these solutions logical and temporal dependencies have to be considered. Petri Nets and their extensions are applied successfully in various fields. Especially in the area of emergency and disaster management [3]. For modeling of sequences of countermeasures, will be discussed information about the influencing factors and endangered objects in order of adequate response to the event. In these order quantitative and qualitative analysis of case study (evacuation system) will be done.

Keywords: Petri nets, qualitative analysis, quantitative analysis, disaster.
2010 MSC: 82C31.

1. INTRODUCTION

The Petri nets formalism [7] allows for the intuitive graphical representations of the modeled systems and, as well as the analysis of the dynamic properties. One of the most important things is as a model system to work correctly, this is mainly determined by *qualitative* (or behavioral) properties. Another important aspect is to make sure that the system meets certain related performance characteristics (or *quantitative properties*).

Petri nets allow checking the correctness of the modeled system at design phase. We will illustrate system modeling and analysis in a case study of a evacuation systems of people in case of disaster.

The paper is organized as follows: we begin with a review of Generalized Stochastic Petri nets in section 2. Section 3 deals with the restrictions of modelling in order to compute qualitative and quantitative properties of a system. Section 4 describes model for the evacuation of people in case of disaster by means of GSPNs and obtined results. Finally, section 7 reports conclusions of the work.

2. GENERALIZED STOCHASTIC PETRI NETS

To perform quantitative and qualitative analysis, Generalized Stochastic PNs (GSPNs) [5] will be used. GSPNs have been extended from the ordinary PNs [7] and contain the same basic sets such as:

- P the set of places;
- T the set of transitions, $P \bigcap T = \emptyset$;
- I, O, H are input, output and inhibition functions: $T \rightarrow N(N = P \bigcup T)$.

They were extended by using of two types of transitions: *immediate transitions* which are produced immediately and *stochastic transitions* which are produced complying with an exponential distribution function. Weighting function $W : T \rightarrow R$, were extended in the following way:

- for a timed transition (represented by a hollow rectangle), $w(t)$ is a rate (possibly marking dependent) of a negative exponential distribution specifying the firing delay;
- for an immediate transition (represented by a filled rectangle), $w(t)$ is a firing weight (possibly marking dependent).

The priority function $\Pi : T \rightarrow N$ associates the lower priorities to timed transitions and higher priorities to immediate transitions.

The selection of which transition will fire is based on the priorities and weights. First, the set of transitions with the highest priority is found and if it contains more than one enabled transition, the selection is based on the rates or weights of the transitions according to the expression:

$$P(t) = \frac{w(t)}{\sum_{t\prime \in E(M)} w(t\prime)} \tag{1}$$

where $E(M)$ is the set of transitions enabled at the marking M, i.e. the set of enabled transitions with the highest priority.

The initial marking $M_0 : P \rightarrow N$ determines the initial state of the modelled system.

When a new marking is reached, if only timed transitions are enabled, this marking is called *tangible*; if at least one immediate transition is enabled, the marking is called *vanishing*.

3. QUALITATIVE AND QUANTITATIVE PROPERTIES

Qualitative properties of a Petri [6] nets is related to such properties as deadlock (no total deadlock), liveness (no partial deadlock), boundedness (on each place the number of tokens cannot grow in an unlimited way) and home state(markings that can always be reached from any reachable state). Reachability graph can be used to determine the boundedness. Also for checking the deadlock, liveness and boundedness invariants analysis can be used.

Using qualitative properties and establishing additional restrictions quantitative properties can be computed. Average number of tokens places is the quantitative property which will be determined for evacuation system of people in case of disaster.

In order to compute quantitative properties of evacuation system we will use the property of stochastic Petri nets (SPN) whereby the Markov chain of the net and the reachability graph of the underlying Place-Transition net are isomorphic. Therefore all properties of the underlying Place-Transition net also hold for SPN and vice versa. For evacuation system which is translated in term of GSPNs we will analyse the embedded Markov chain of the corresponding stochastic process [6], in other words we examine only tangible state of the system. The probability of changing from one marking to another is independent of the time spent in a marking. In this context for qualitative analysis of a GSPNs we will exploit the underlying Place - Transition net of the GSPN and use their algorithms.

Will be determine restrictions for an integration of time, such that the results of a qualitative analysis remain valid for a quantitative analysis as well. The restrictions are related to Extended Free Choice nets, in these nets conflicts may occur between transitions of the same kind. This condition is called EQUAL-Conflict. Respecting the conditions set out above we have the following:

Theorem 3.1. *if we are given an $EFC - GSPN$ whose underlying Place-Transition net is live and bounded, the following holds:*

- *Condition EQUAL-Conflict $\Rightarrow$ GSPN has no timeless trap.*
- *Condition EQUAL-Conflict $\Rightarrow$ GSPN live.*
- *Condition EQUAL-Conflict $\Rightarrow$ GSPN has home state.*

In the folowing we will use these relationships to determine the qualitative and quantitative properties of evacuation system in case of disaster.

4. CASE STUDY

In any building are meeting their evacuation plan, in these planes we will denote rooms and doors. Suppose that there is a building as it is specified in Fig. 1. By $R1 - R9$ are denoted the rooms, by $D1 - D9$ are denoted the doors. In Fig. 2, the GSPN of this building is given.

The rooms are modelled by using the places $R1 - R9$, doors are modelled by using the places $D1 - D9$, movements from the rooms to the doors takes time and are modelled by the timed transitions $t0 - t8$, and movements from the doors into the rooms are modelled by immediate transition $t9 - t15$. Each inhabitant is modelled by one token, respectively. The people are moving according to evacuation plan from room to room until they exit the building, they are accumulated in the place which represents the last door ($D9$). The initial marking is $M_0 = (0, 0, 0, 0, 0, 0, 0, 0, 0, 2, 1, 1, 1, 1, 1, 1, 1, 1)$ representing the initial state of the system.

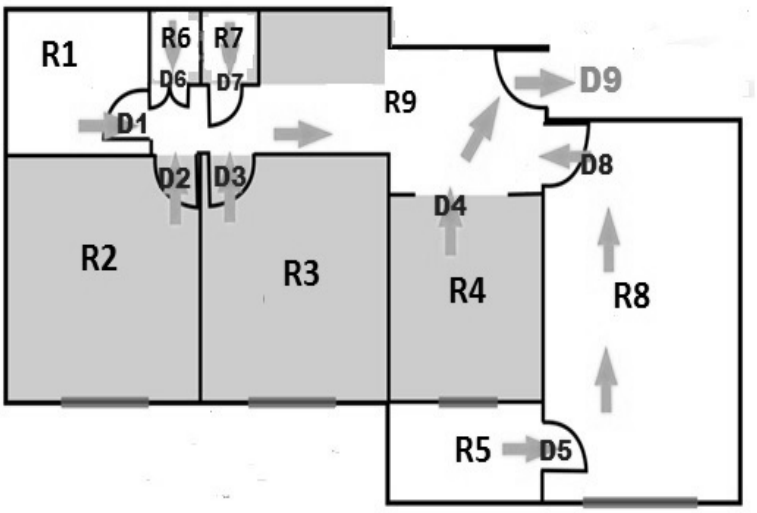

Fig. 1.: Building plan.

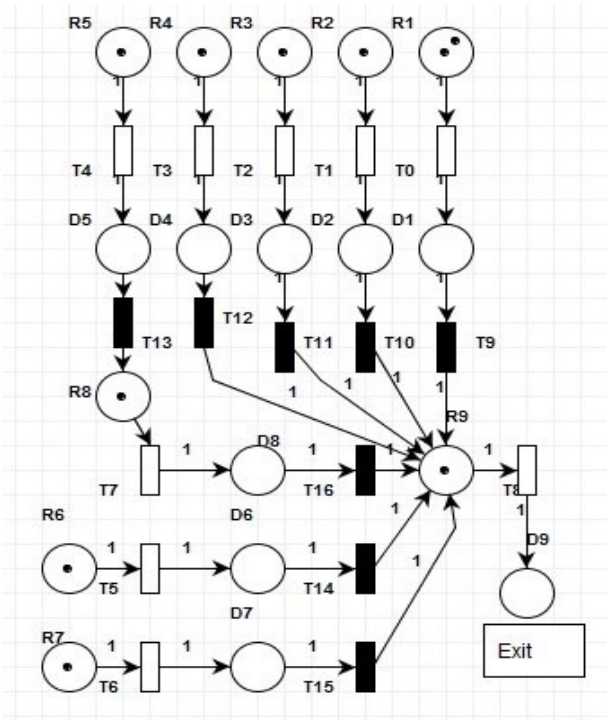

Fig. 2.: Petri nets of the building from Figure 1.

Petri net classification results

State Machine	true
Marked Graph	false
Free Choice Net	true
Extended Free Choice Net	true
Simple Net	true
Extended Simple Net	true

Petri net state space analysis results

Bounded	true
Safe	true
Deadlock	false

Fig. 3.: Petri net classification and state space results.

Properties of the evacuation system:

- it must be *bounded* - a finite set of states, leading to a finite number of steps necessary for evacuation.
- it must be *safe*-transitions do not influence each other, each door and room works independently of one another.
- it must be *conservative*-number of people is constant, do not appear new people, they are accumulate in the last place.
- it must be without *deadlock*-dead transitions do not occur, it means that do not may appear persons who are unable to evacuate.

From the results obtained after the simulation in PIPE tool [8] is observed that the net is bounded, safe, conservative and no total deadlock. Also the net is EFC-net, this it allows us to perform the existence of home states. The net fulfills set out properties for the evacuation system and this means that it works correctly.

5. CONCLUSION

In this study, a method of Generalized Stochastic Petri Nets was proposed for modeling and simulation of system that represent emergency evacuation of people in case of social disaster. This method allows, with some restrictions checking quantitative and qualitative properties for working correctly of the system.

P-Invariants

D1	D2	D3	D4	D5	D6	D7	D8	D9	R1	R2	R3	R4	R5	R6	R7	R8	R9
1	1	1	1	1	1	1	1	1	1	1	1	1	1	1	1	1	1

The net is covered by positive P-Invariants, therefore it is bounded.

P-Invariant equations

M(D1) + M(D2) + M(D3) + M(D4) + M(D5) + M(D6) + M(D7) + M(D8) + M(D9) + M(R1) + M(R2) + M(R3) + M(R4) + M(R5) + M(R6) + M(R7) + M(R8) + M(R9) = 10

Fig. 4.: P invariants of the evacuation system.

Acknowledgments. The research is performed in the frame of the grant "Modelling and Mitigation of Social Disasters Caused by Catastrophes and Terrorism" (SPS G4877) supported by the NATO international Science for Peace and Security Program.

References

[1] I. Titchiev, *Petri nets to model disaster prevention*, Proceedings of the Workshop on Foundations of Informatics, August 24-29, Chişinău, Republic of Moldova, 445-449, 2015.

[2] M.Takashi, N.Yoshifumi, F. a Yasuhiro and M.Atsushi, *Development of Tsunami refuge PETRI-NET simulation system utilizable in independence disaster prevention organization*,The 14th World Conference on Earthquake Engineering,October 12-17, Beijing, China, 2008.

[3] O. Tsujihara, K. Terada, and T. Sawada, *Development of simulation system of spreading reoccurring simultaneously in many places in an earthquake using Petri-net*, Journal of Applied Computing in Civil Engineering 14:11, 129-136, 2005.

[4] J. L. Peterson, *Petri Net Theory and The Modeling of Systems*, Prentice Hall, 1981.

[5] B.Falko, P.Kritzinger, *Stochastic Petri Nets- An Introduction to the Theory*, Friedr. Vieweg and Sohn Verlag, Braunschweig, Wiesbaden, Germany, Second Edition, 218 p., 2002.

[6] M. Ajmone Marsan, G. Balbo, G. Conte, S. Donatelli, G. Franceschinis,*Modelling with Generalized Stochastic Petri Nets*, Wiley Series in Parallel Computing, John Wiley and Sons, 1995.

[7] W. Reisig, *Petri nets. An introduction*, Springer-Verlag, Berlin, 161 p., 1982.

[8] N. Akharware, *PIPE2: Platform Independent Petri Net Editor.* http://pipe2.sourceforge.net/documents/PIPE2-Report-20050814.pdf, 2005.